BLH®

Precision Force and Weight Measurement Technologies

KDH-3/3B High Capacity Weigh Modules

Applications:

Mixing Tanks
Blenders
Reactors

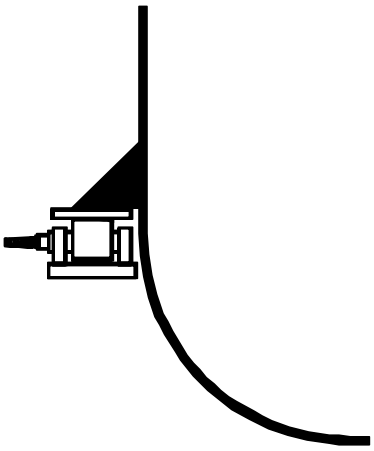

- **All Stainless Steel**
- **22,500, 45,000, and 112,500 Pound Capacities**
- **Seismic and Wind Resistant Self-Checking Design**
- **Resistant To Sideloads**
- **Accommodates Process Dynamics and Thermal Expansion**
- **Fault Protected Transducer Excitation**

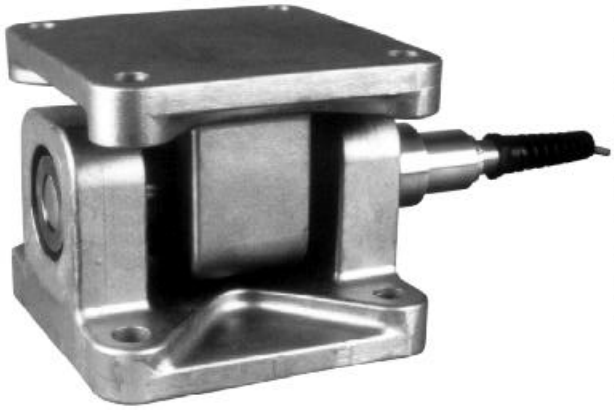

Product Description

KDH-3B Weigh Modules incorporate a cylindrical double-ended shear beam transducer that is highly resistant to measurement errors caused by process dynamics. The self checking mounting hardware is designed to meet both ANSI and UBC structural requirements for wind and seismic applications, while allowing for vessel thermal expansion and contraction.

Both the beam transducer and mounting hardware assembly are constructed entirely of hardened stainless steel. The mounting hardware is electropolished and the beam is sealed to IP67 for reliable use in sanitary and/or corrosive process environments.

The KDH-3B ability to measure accurately in applications where thermal expansion and dynamic forces are present, make it very well suited for heated and agitated process weighing systems.

ThermoBLH

An ISO 9001 Registered Company

Design Features

The cylindrical double ended shear beam module is designed to measure shear stresses induced by an applied load without errors caused by thermal expansion. The combination beam and mounting hardware are ideally suited for use on large dynamic process vessels where temperature changes, vibration, and possibly seismic forces are encountered.

The cylindrical tube type transducer offers several advantages over rectangular shear beam designs. Superior resistance to moisture contamination is accomplished by eliminating gaged pockets on the outside of the beam. Instead, the KDH uses strain gages applied to the inside wall of the tube. In addition, the cable entry is equipped with a conduit fitting for cable protection and is internally potted.

Structurally, the cylindrical tube is equally strong in both the vertical and horizontal planes. Unlike rectangular shear beams that are typically weaker in the horizontal plane, KDH modules are less affected by sideloads induced by vibration, temperature, or process dynamics. The design of the mounting hardware eliminates the need for highly stressed pins and/or bolts to attach the beam. This reduces the adverse effects of varying edge and point stresses and makes the overall module less susceptible to calibration changes.

Low profile design and symmetrical mounting bolt patterns make KDH modules easy to install on new or existing structures and vessels.

Cylindrical Beam Transducer

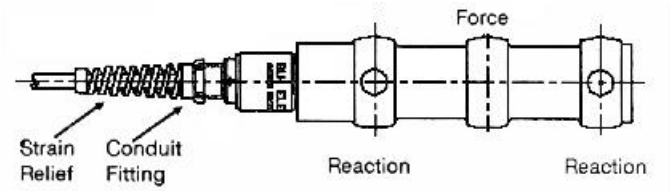

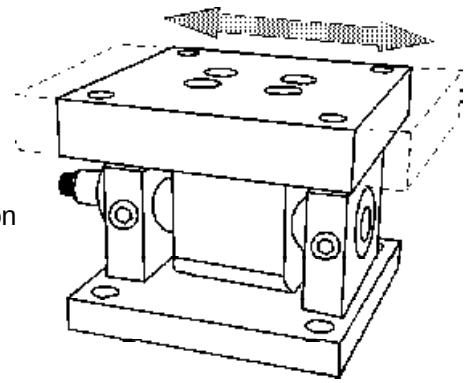

Allows for Vessel Thermal Expansion

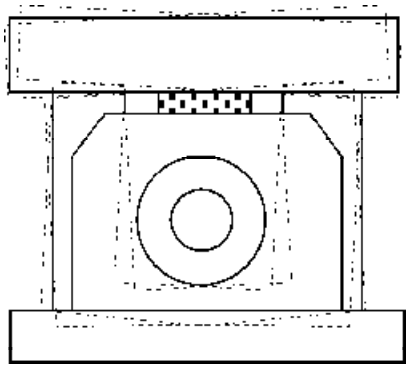

Accommodates Construction Variations

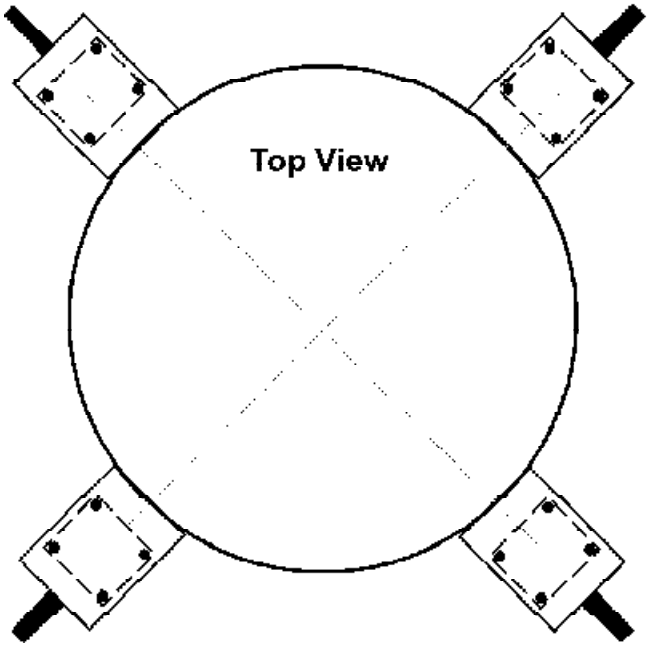

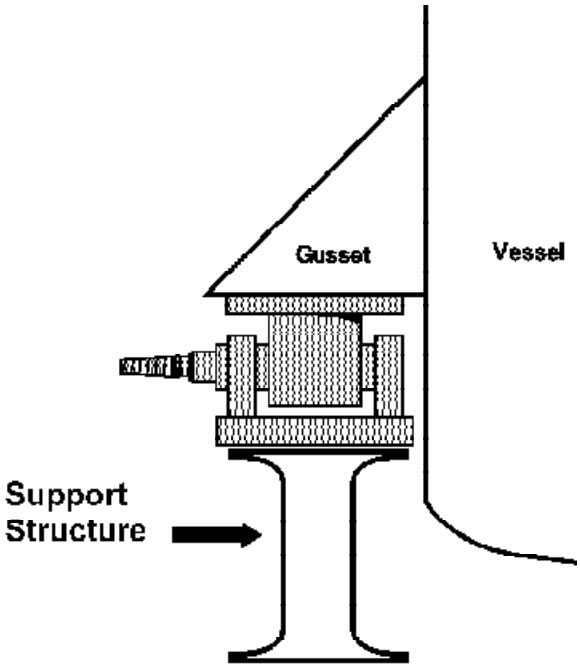

Outline and Wiring Diagrams

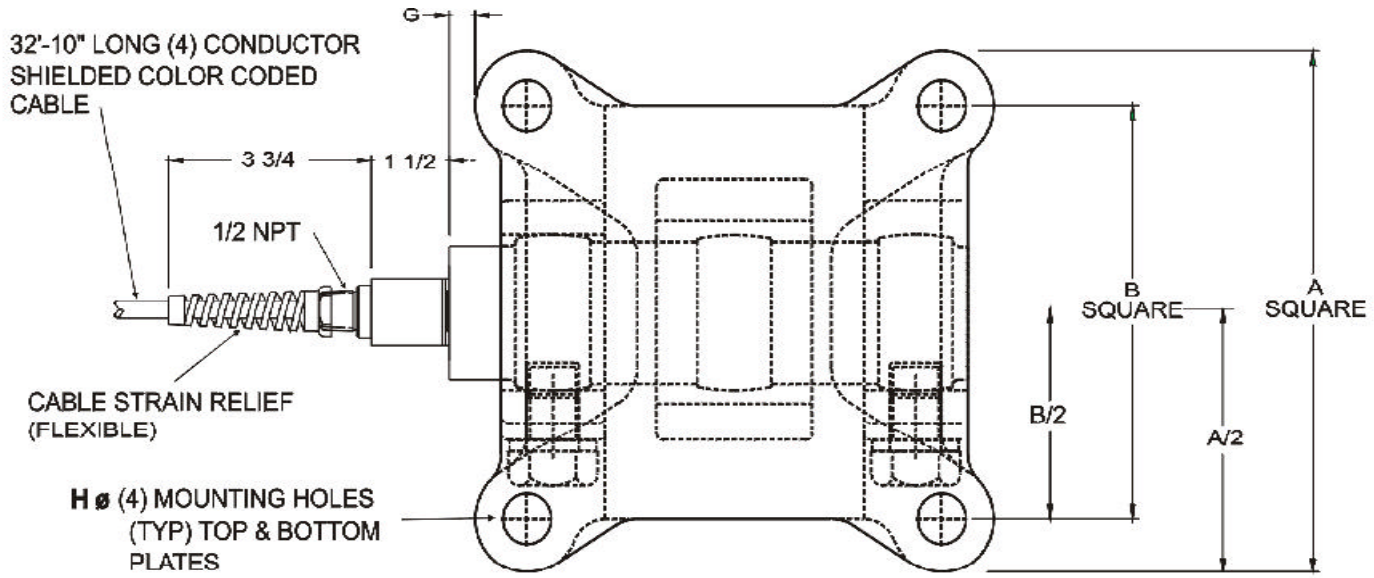

NOTES:

1. MAX ALLOWABLE TILT BETWEEN TOP & BOTTOM MTG PLATES IS ±3°.
2. ALLOWABLE AXIAL TRAVEL IS SHOWN BY "T" DIM.

CABLE COLOR CODE

INPUT	GREEN + BLACK -
OUTPUT	WHITE + RED -

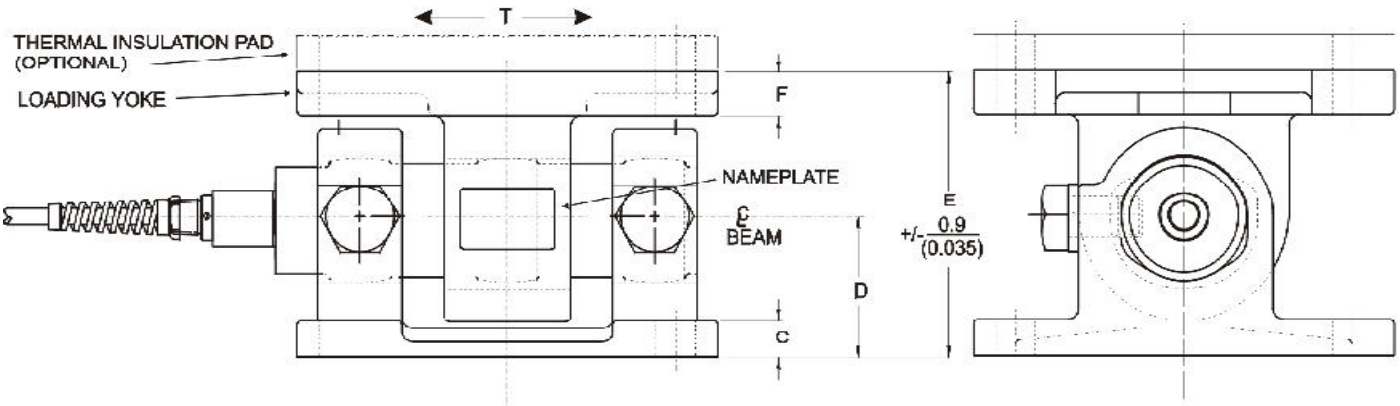

	CAPACITY kN/Klb	A	B	C	D	E	F	G	H	T ±	WEIGHT kg/lb
KDH-3	100 & 200 (22.5) (45)	178 (7)	139.7 (5.50)	25.4 (1)	71.6 (2.82)	146.5 (5.77)	25.4 (1)	28.5 (1.12)	17.5 (.69)	19 (.75)	21 (46)
KDH-3B	500 (112)	254 (10)	203.2 (8)	25.4 (1)	85.1 (3.35)	172.5 (6.79)	25.4 (1)	12.7 (.50)	23.6 (.93)	25.4 (1)	34 (75)

Dimensions shown in mm/(inches)

Specifications and Accessories

General (% Rated Output)

Capacity	100kN	200kN	500 kN
Safe Load	150%	150%	150%
Ultimate Load	300%	300%	300%
Safe Uplift	150%	75%	75%
Ultimate Uplift	300%	150%	150%
Safe Sideload (Axial)	100%	50%	50%
Ultimate Sideload (Axial)	200%	100%	100%
Safe Sideload (Transverse)	100%	50%	50%
Ultimate Sideload (Trans.)	200%	100%	100%

Performance

Input Resistance	700 ohms +/- 7 ohms
Output Resistance	700 ohms +/- 7 ohms
Rated Output	2.0 mV/V +/- 0.1%
Zero Balance	1% R.O. (Rated Output)
Combined Error (best fit)	0.10% R.O.
Creep (20 minutes)	0.05% R.O.
Repeatability	0.02% R.O.
Recommended Excitation	10 V ac or dc (20 V max.)
Safe Temperature Range	-34.4 to 104.4°C (-30 to 220°F)
Compensated Range	-1 to 54°C (30 to 130°F)

Temperature Effects (30 -130°F)

Zero Balance	0.0025% R.O. per °F
Span	0.0015% Reading per °F

Material

Beams & Brackets	15-5 PH or 17-4 PH SS
Environmental Class & Moisture Protection	NEMA 4X/ó, IEC IP67 IEC 68-2-4 Test D, 200 cycles (min)

Deflection Under Load and Unit Weight

CAPACITY	DEFLECTION mm (in.)	WEIGHT
100 kN	0.51 (0.020)	45 lb
200 kN	0.33 (0.013)	46 lb
500 kN	0.31 (0.012)	75 lb

Corrosion Protection

All Units	electropolished stainless steel (mounting hardware)

Termination

100, 200, 500 kN	10 m (32', 10") cable with conduit fitting

Documentation List

Outine drawing	# 471435-3

Approvals

FM/CSA	Div 1 - with intrinsic safety Div 2 - without intrinsic safety

NOTES: Many performance specifications are proven on a statistical sample basis.
BLH is continually seeking to improve product quality and performance. Specifications may change accordingly.

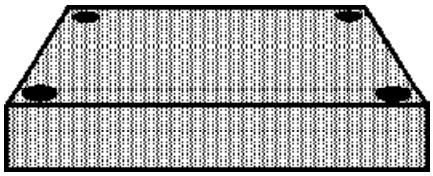

Thermal Insulation Pads

Thermal insulation pads reduce heat conducted from a heated vessel. The pads are made of rigid laminate with extremely low thermal conductivity, BLH recommends using insulation pads if the vessel mounting surface temperature exceeds 52C (130F). Pads are 1" thick with bolt spacing identical to module top plates.

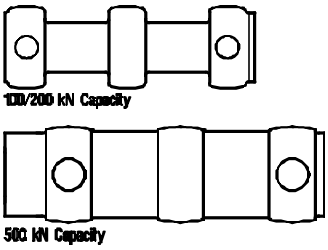

Simulated Weigh Beams

Optional simulated (dummy) beams are used in place of actual KDH transducers during the installation process. Using simulated beams eliminates the risk of damaging the KDH transducer while welding or positioning the weigh vessel. All critical simulated beam dimensions are identical to actual KDH outline specifications.

Main Office
75 Shawmut Road - Canton, MA 02021
Tel: (781) 821-2000 - Fax: (781) 828-1451
web site: http://www.blh.com

ISO 9001
Registered

U.S.A. Facility

Canada
41 Horner Ave, Unit 5
Toronto, Ontario M8Z 4X4
Tel:(416) 251-2554 - Fax: (416) 251-2690
Toll Free: (800) 567-6098